SPECIFICATION FOR APPROVAL

Customer	*ADLab. / SCEPTRE*
Model	*GIPST14020HBA*
Panel	*AUO 40 inch 20 Lamps*
Customer P/N	

☐ **Condition approval** ■ **Reference**

☐ **Final approval**

ACCEPTING STATUS
ACCEPTED DATE : M/ D/ Y/

PERP.	**Mudi**	CHKD.	**William**	APPR.	**Robert**
DATE	**2009.02.16**	DATE	**2009.02.16**	DATE	**2009.2.16**

GREATCHIP TECHNOLOGY CO., LTD.
NO.38, 20th ROAD, TAICHUNG INDUSTRY PARK, TAICHUNG, 408 TAIWAN
TEL : 886-4-2355-6718 FAX : 886-4-2355-0107
E-MAIL : greatchip@greatchip.com.tw WEBSITE : www.greatchip.com.tw

C O N T E N T S

Modified History

1. GREATCHIP'S PARTS NO.....1
2. SCOPE.....1
3. SUITABLE LOAD.....1
4. Input Characteristic.....1-1
5. OUTPUT CHARACTERISTIC.....1-1
6. Protection.....2
7. Control Function.....2
8. E.M.I.....2
9. Safety Characteristics 2
10.Environmental Condition.....3
11.Life.....3
12.Inverter Unit.....4
13.CONNECTOR PIN ASSIGNMENT. 5
14.TEST CIRCUIT.....6
15.CIRCUIT DIAGRAM.....8
16.P.C.B. LAYOUT.....10
17.PCB OUTLINE DIMENSIONS.....13
18.PARTS LIST.....14

ATTACHMENTS.....24

G R E A T C H I P T E C H N O L O G Y C O ., L T D .
NO.38, 20th ROAD, TAICHUNG INDUSTRY PARK, TAICHUNG, 408 TAIWAN
TEL : 886-4-2355-6718 FAX : 886-4-2355-0107
E-MAIL : greatchip@greatchip.com.tw WEBSITE : www.greatchip.com.tw

Modified History

ITEM	Modified Date	Page	Modified Content	PERP.	CHKD.	APPR.
1	2009/2/16	ALL	新增	Mudi	William	Robert

GREATCHIP TECHNOLOGY CO., LTD.
NO.38, 20th ROAD, TAICHUNG INDUSTRY PARK, TAICHUNG, 408 TAIWAN
TEL : 886-4-2355-6718 FAX : 886-4-2355-0107
E-MAIL : greatchip@greatchip.com.tw WEBSITE : www.greatchip.com.tw

GREATCHIP Technology

LIPS SPECIFICATION SHEET for GIPST14020HBA

1. GREATCHIP's Parts No. : GIPST14020HBA

2. SCOPE : This specification requirements of the subject parts used in 40 inch 20 Lamps LIPS (LCD Integrated Power System).

3. SUITABLE LOAD : AUO 40" Full HD Color TFT-LCD Module

Panel Model : T400HW01 V.4

Balance Board : DARFON 4H.V2358.181/D

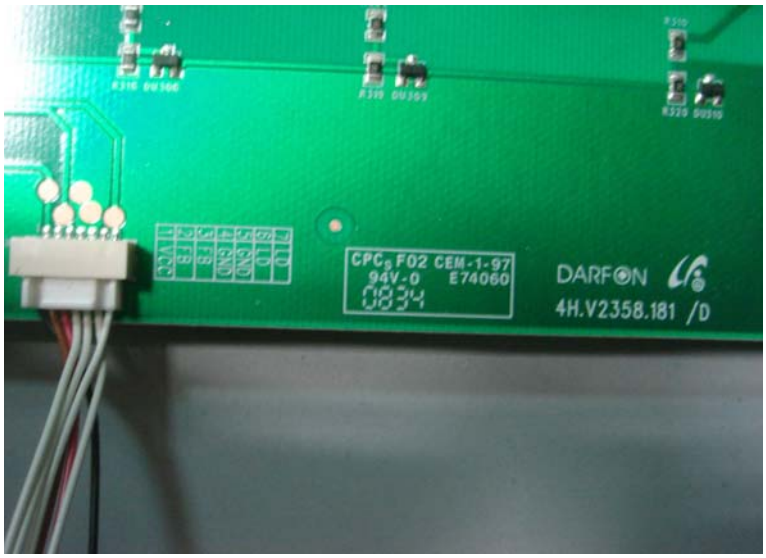

4. Input Characteristic :

4-1. AC Input Voltage ---------- 100Vac ~ 240Vac

4-2. AC Input Frequency ---------- 47Hz ~ 63Hz

4-3. Input Power ---------- Max. 320W @ 100V with 40" 20L after 30 minute

4-4. Input Current ---------- Max. 3.4A @ 90V with 40" 20L

4-5. Power Factor ---------- >= 0.9@240Vac

4-6. Inrush Current ---------- <= 100Apeak @ 240Vac

4-7. Fuse ---------- 5A/250V

4-8. Power saving ----------<=1W@240Vac , PSON -- off

5. OUTPUT CHARACTERISTIC :

5-1. Power Unit

Channel	Stand-by	V1	V2	V3
Regular Output Voltage	$5V_{SB}$	5V	12V	24V
Output Voltage	4.845V ~ 5.355V	4.845V ~ 5.355V	10.8V ~ 13.2V	18.5V ~ 25.2V
Minimum Load Current	0.07A	0A	0A	0.1A
Typical Load Current	1A	1A	2.5A	1.5A
Maximum Load Current	1.5A	1.5A	3A	2A
Peak	-	-	-	-

5-2. Ripple & Noise

Regular Output Voltage	$5V_{SB}$	5V	12V	24V
Ripple	50mV	50mV	12mV	240mV
Noise	100mV	100mV	240mV	480mV

Note: A 0.1 μF Ceramic and 10 μF Electrolytic capacitors should be put across output terminals during ripple & noise test. The oscilloscope bandwidth is set at 20MHz and co-axial probe will be used to measure it. The test condition is max. load and normally line.

remark 1) Over / Under Shoot : Less than 10% of nominal value.

remark 2) Turn On Time : 1.5 seconds Maximum.

6. Protection :

6.1 Switching Power Protection

6.1.1 SCP :

Over Current Protection will act when output is short circuit.

* 5VSB: Auto Recovery
* 5V: Auto Recovery
* 12V: Latch Off
* 24V: Latch Off

OCP:	5Vsb(200%) With 5V LOAD_Max	5V(200%) With 5Vsb LOAD_Max	12V(200%) With 24V LOAD_Max	24V(200%) With 12V LOAD_Max
Min	1.5A		3A	2A
Max	3A		6A	4A

6.1.2 OVP :

Over Voltage Protection will act when output voltage(within max laod) reach 50% of maximum value.

* 5VSB: Auto Recovery
* 5V: Auto Recovery
* 12V: Latch Off
* 24V: Latch Off

6.1.3 OTP :

Over Temperature Protection will act when environment temperature is over 100℃.

*Latch Off

7. Control Function :

Signal	5VSB	5V	12VA	24VA	Inverter
PS/ON= High	5.1V	5.1V	12V	24V	-
PS/ON= Low	5.1V	0V	0V	0V	Disable

BLON=High	5.1V	5.1V	12V	24V	Enable
BLON=Low	5.1V	5.1V	12V	24V	Disable

Turn-On Delay

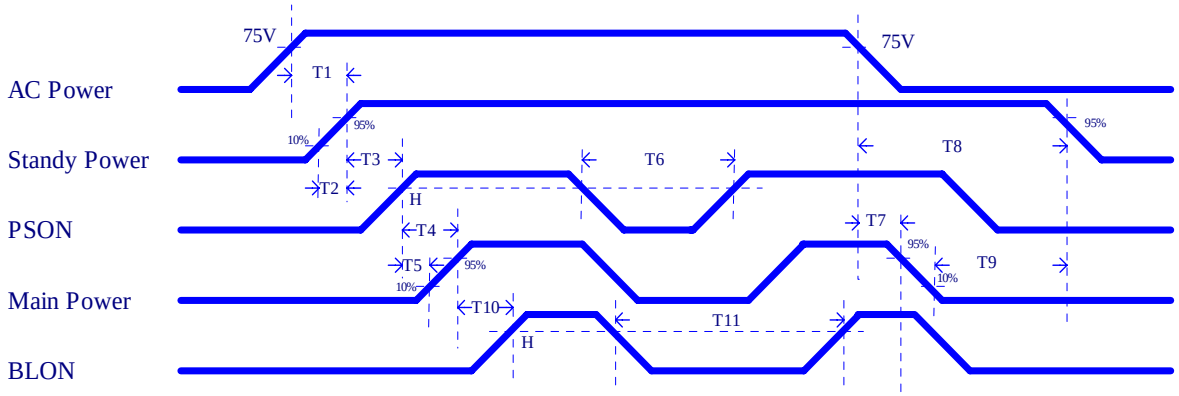

Parameter	Parameter	Limits		
		Min	Max	Units
T1.T4	Power ready delay time	-	2	s
T2.T5	Power rising time	1	100	ms
T3	PSON ready free time	0	-	s
T6	PSON low period	500	-	ms
T7	Main Power hold time	10	-	ms
T8	Standby Power hold time	>T7	100	ms
T9	Standby Power falling delay time	0	-	ms
T10	BLON ready free time	>T4	-	ms
T11	BLON low period	500	-	ms

8. E.M.I. :

The power supply will design to meet following international regulations.
FCC Class B, VCCI Class B, and CISPR 22 Class B.

9. Safety Characteristics :

The power supply will design to meet following international regulations.

9.1 Safety Meet Requirements

UL : UL60950 Third Edition & UL6500
cUL :: CSA 22.2 No.60950 & E60065
TUV : EN60950 & EN60065
CCC : GB4943 & GB8898
CB : IEC60950 & IEC60065

9.2 Withstand Voltage

Primary to secondary : 3000Vac 10mA for 3 seconds.

9.3 Isolation Resistance : More than 10MΩ while withstanding of 500Vdc.

10. Environmental Condition :

10.1 Operating:

The operating ambient temperature is 0℃ to 55℃
The operating relative humidity is 25% to 85%.

10.2 Storage : (without frosting or clewdrop)

The storage temperature is -20℃ to 80℃.
The storage relative humidity is 25% to 95%.

10.3 The operating rate(Tc) shall be under the limitation of each component specification.

11. Life :

11.1 On-Off Life

To verify the LIPS withstand 10,000 time on-off repetition of primary power without failure or damage at 115Vac or 230Vac input.

11.2 Operational Life

The LIPS is designed for a minimum life of 50,000 power-on hours at 25℃ Ambient temperature.

12. Inverter Unit

These specifications are applied to GIPST14020HBA for driving 40" 20L AUO panel.

Item	Symbol	Minimum	Typical	Maximum	Unit	Remark
Input Voltage	Vin	-----	385.0	-----	Vdc	
Input Current	Iin	-----	0.47	-----	A	Vin = 380V Full Load (after heat run 30min)
Input Power	Pin	-----	180 (ref)	-----	W	
BL_{ON} ON / OFF Control	ON	3.3	-----	5.25	Vdc	On Stage
	OFF	-----	0.0	0.8	Vdc	Off Stage
PWM Dimming Control	BL_{DIM}	0.0	-----	3.3	Vdc	FULL LOAD(3.3Vdc)
HV-Side Total Current	Iout (max.)	-----	168 (ref)	-----	mA	Vin = 385V Full Load (after heat run 30min)
Output Current BL_{DIM} = 3.3V	Iout (max.)	7.8	8.5 (ref)	9.2	mA	for 1 Lamp (ref.)HV-Side
HV-Side Total Burst-Mode PWM Duty BL_{DIM} = 3.3V	Dpwm (max.)		100.0		%	TBD
HV-Side Total Burst-Mode PWM Duty BL_{DIM} = 0V	Dpwm (min.)	15	20	25	%	TBD
Operating Frequency	Freq.	42	45	47	KHz	
Operating Voltage	Vload	-----	1050 (ref)	-----	Vrms	
KICK OFF Voltage	Vload	1900	-----	-----	Vrms	for Lamp Side at 25℃
Burst-Mode Frequency	FB1	150	160	170	Hz	Internal PWM

Load : AUO 40" 20 Lamps TFT-LCD Panel

13. CONNECTOR PIN ASSIGNMENT :

13-1. AC Input Connector

CNA1 : JWT A3963WV2-5P or Equivalent

Pin No.	1	2	3
Signal	N	FG	L

13-2. Signal Connector

CNE1 : JWT A2543WV0-15P-A or Equivalent

Pin No.	1	2	3~4	5~7	8	9	10~11	12~13	14~15
Signal	PSON	5Vsb	5V	GND	PWM	BL_ON	GND	12V	24V

remark 1)

PSON & BLON	ON	3.3V ~ 5.25V
	OFF	0V ~0.8V
HV-Side Tota BLDIM	Max.	3.3V (Burst-Mode PWM Duty =100%)
	Min.	0V Burst-Mode PWM Duty (15~25)%

CNE2 : JST B7B-PH-K or Equivalent

Pin No.	1	2	3	4	5	6	7
Signal	Vcc	FBK	FBK	GND	GND	LD	LD

remark 2)

vcc	Lamp Normel State	10V ~ 15V
LD Lamp Detection	Lamp Normel State	10V ~ 15V
	Lamp Protection State	0V ~ 0.8V

13-3. HV Output Connector

CNF1A :TKP P35J1L-02-HB(LF) or Equivalent

Pin No.	1	2
Signal	HV+	HV+

14. TEST CIRCUIT :

14-1. Back-Light Unit

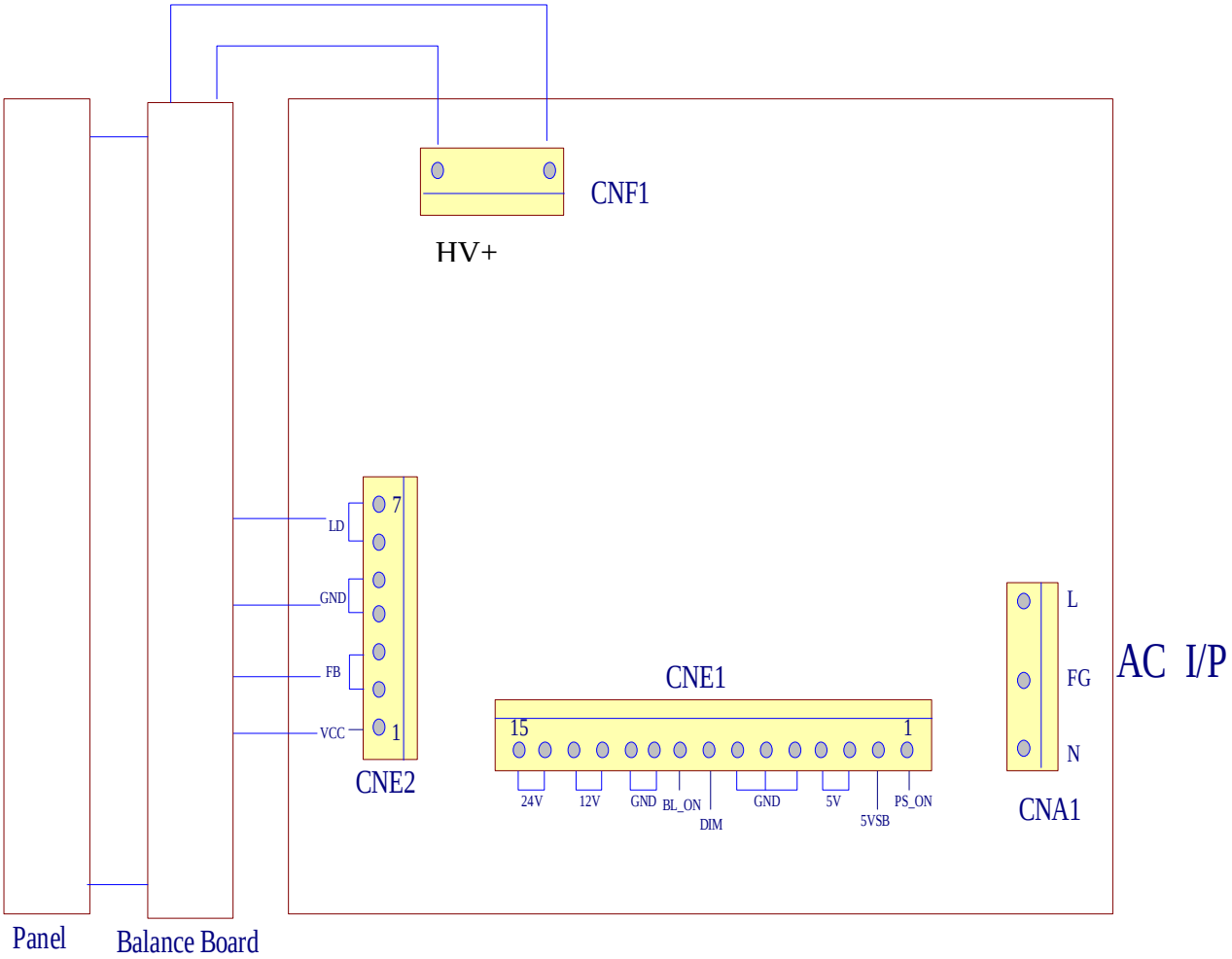

14-2. Cement Resistor Dummy Load

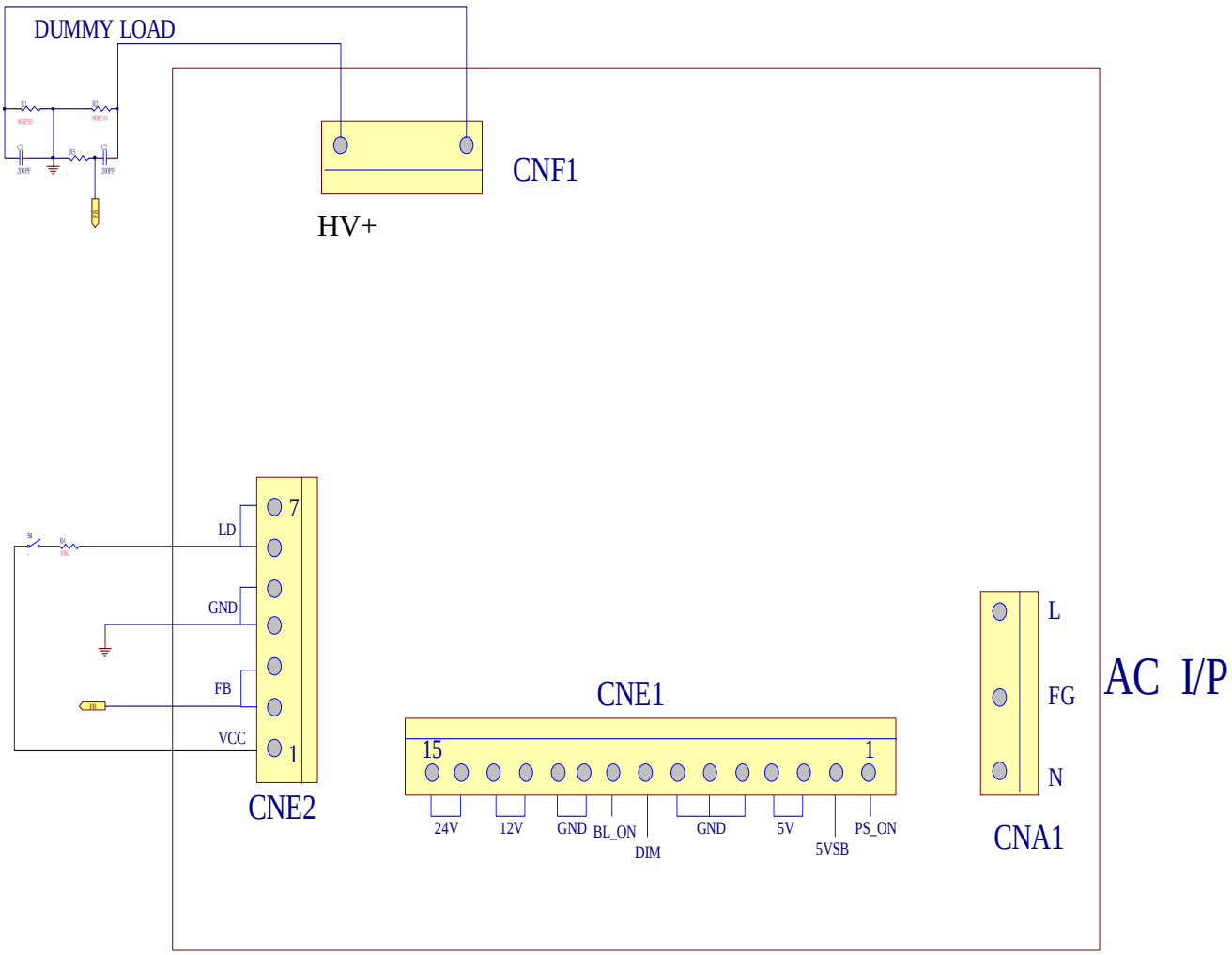

15.CIRCUIT DIAGRAM:

15-1.POWER

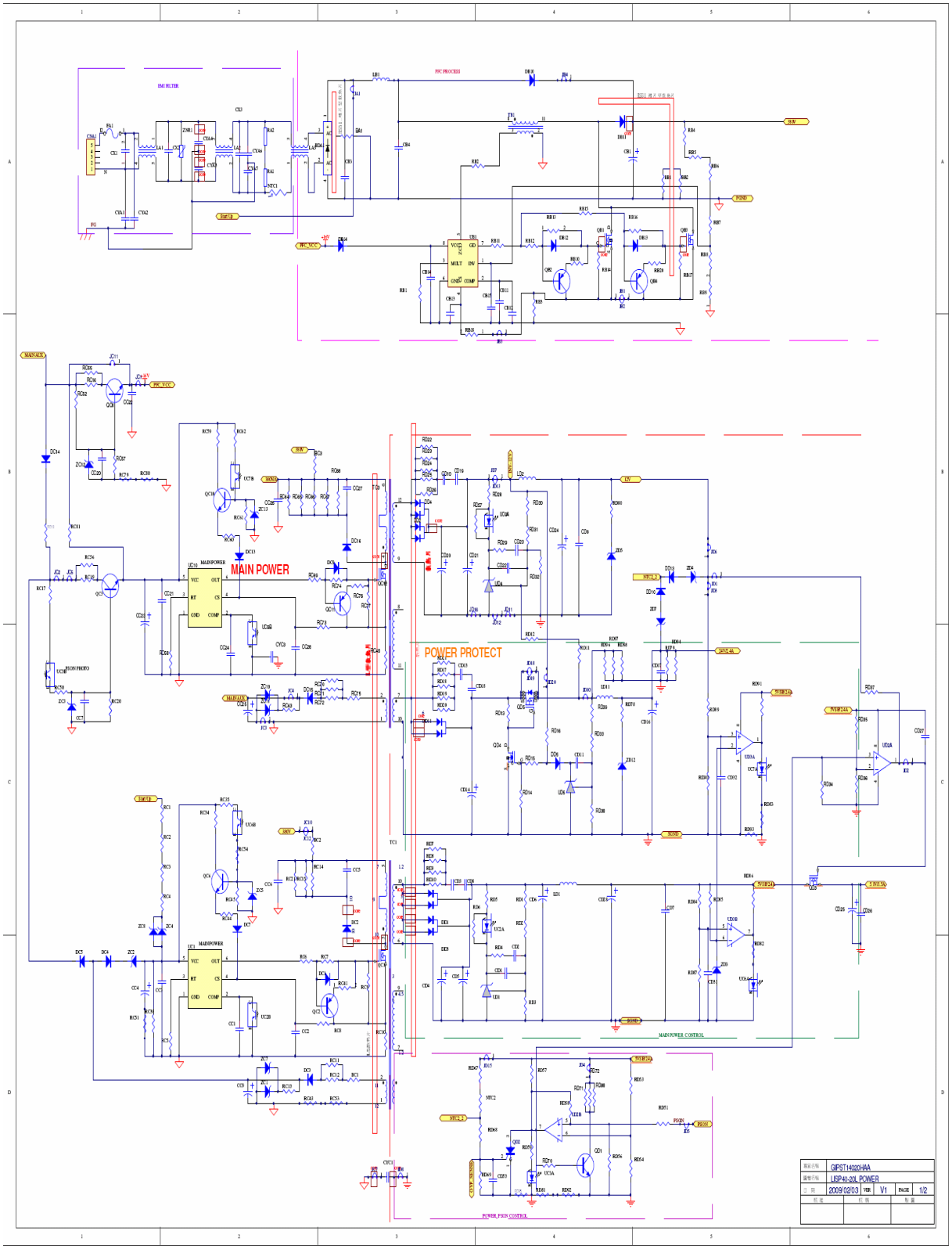

15-2.Inverter

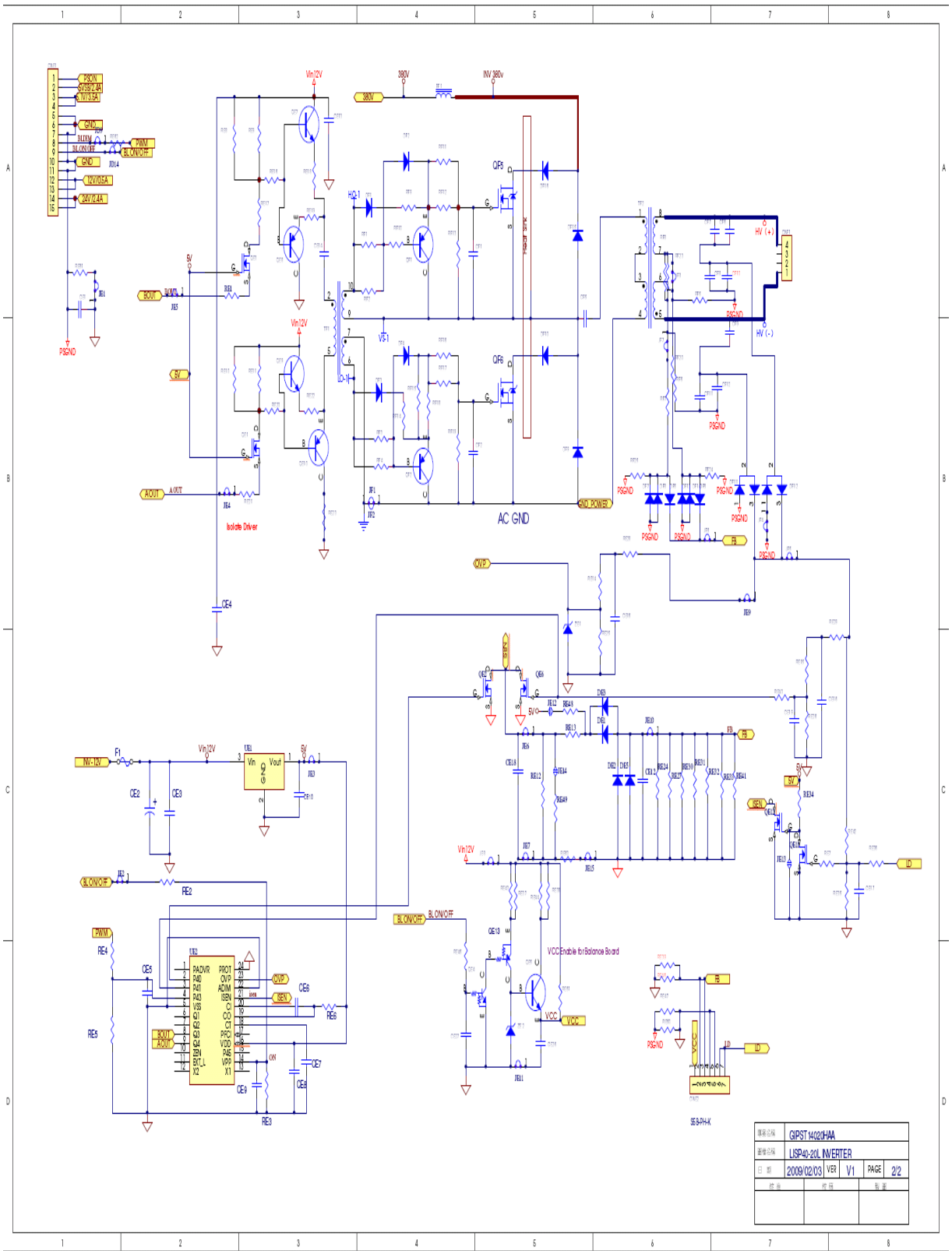

16. P.C.B. LAYOUT / COMPONENT LOCATION:

16-1. TOP layer

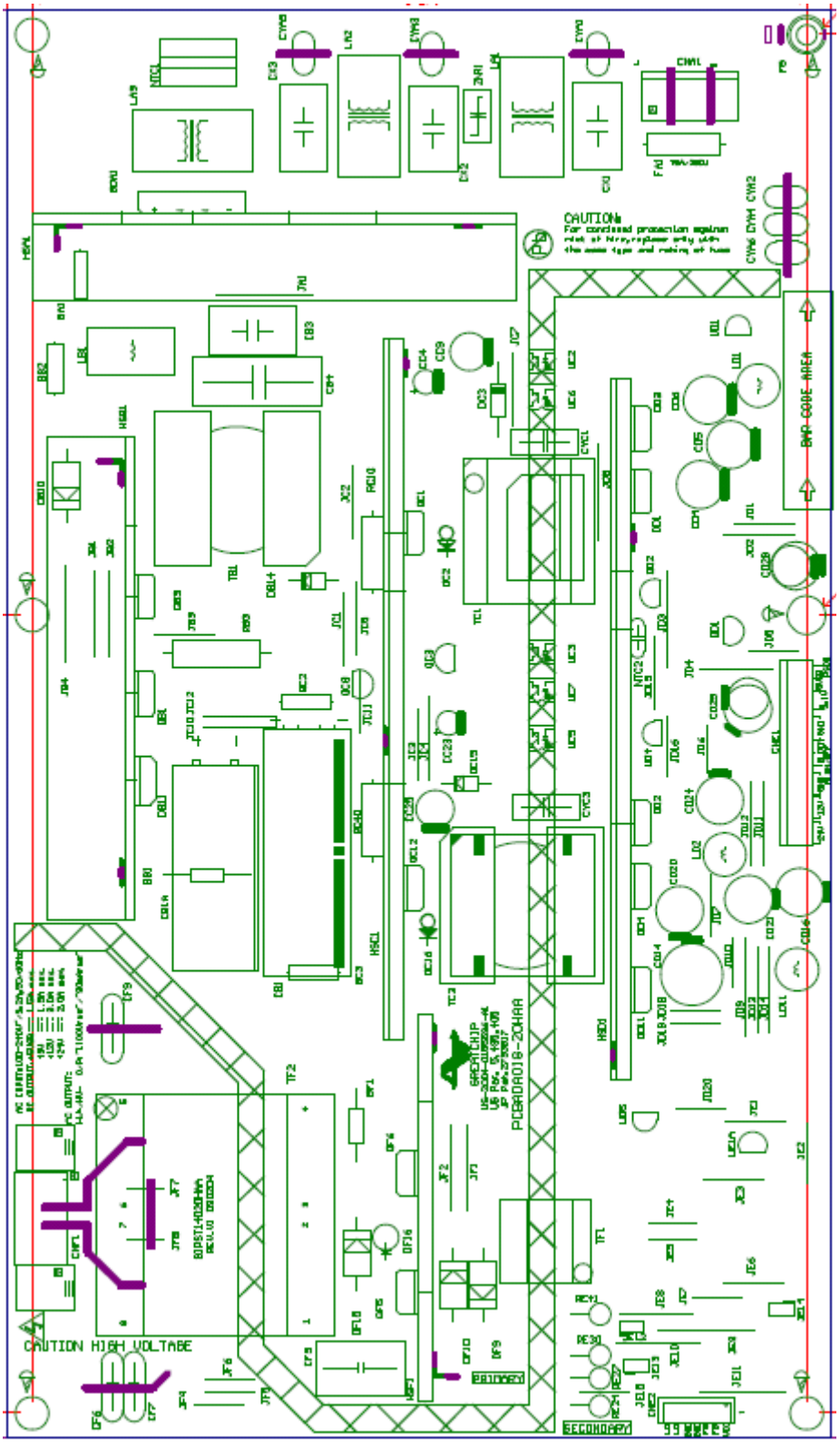

16-2. BOTTOM layer

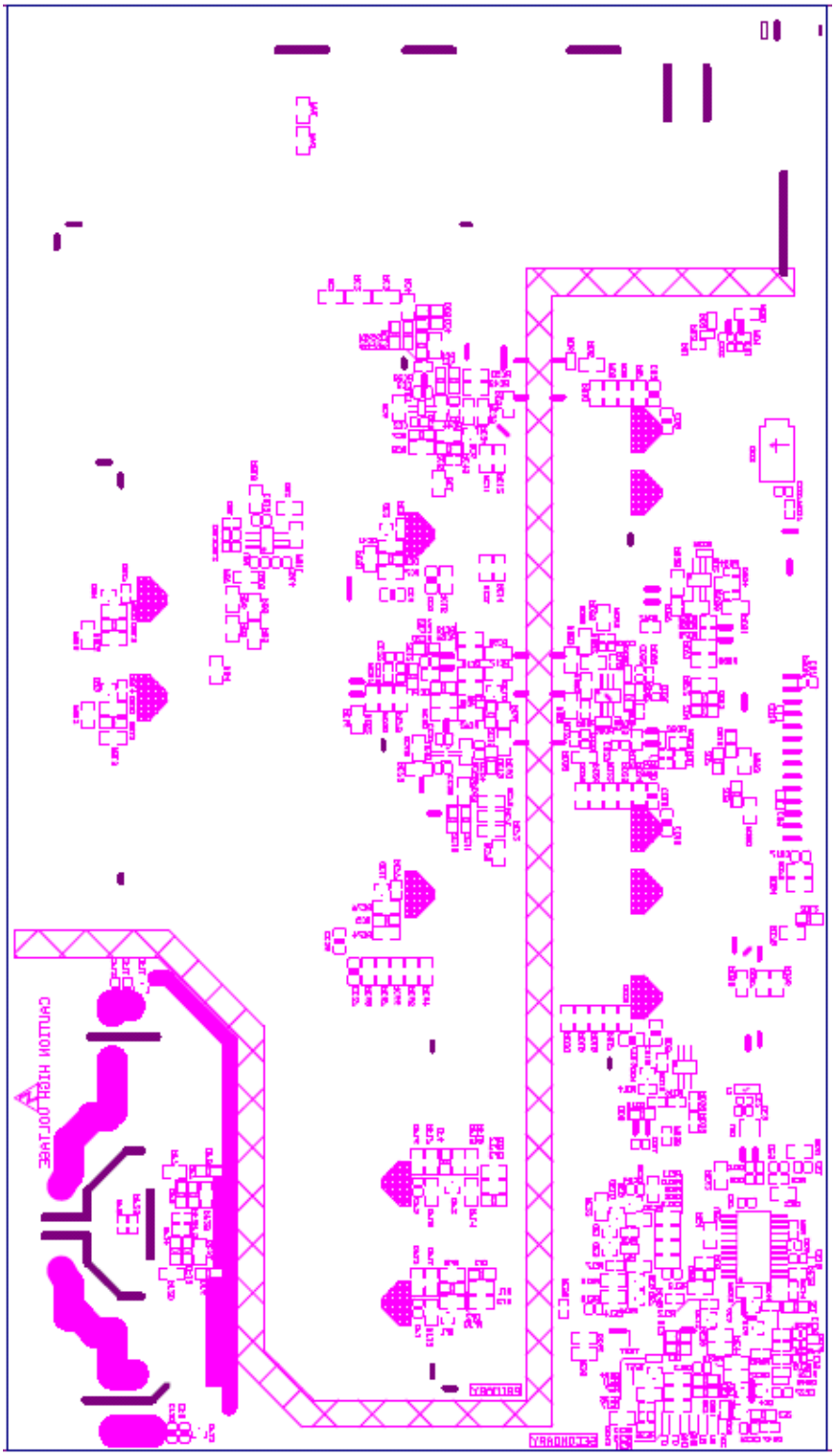

16-3. Bottom Solder

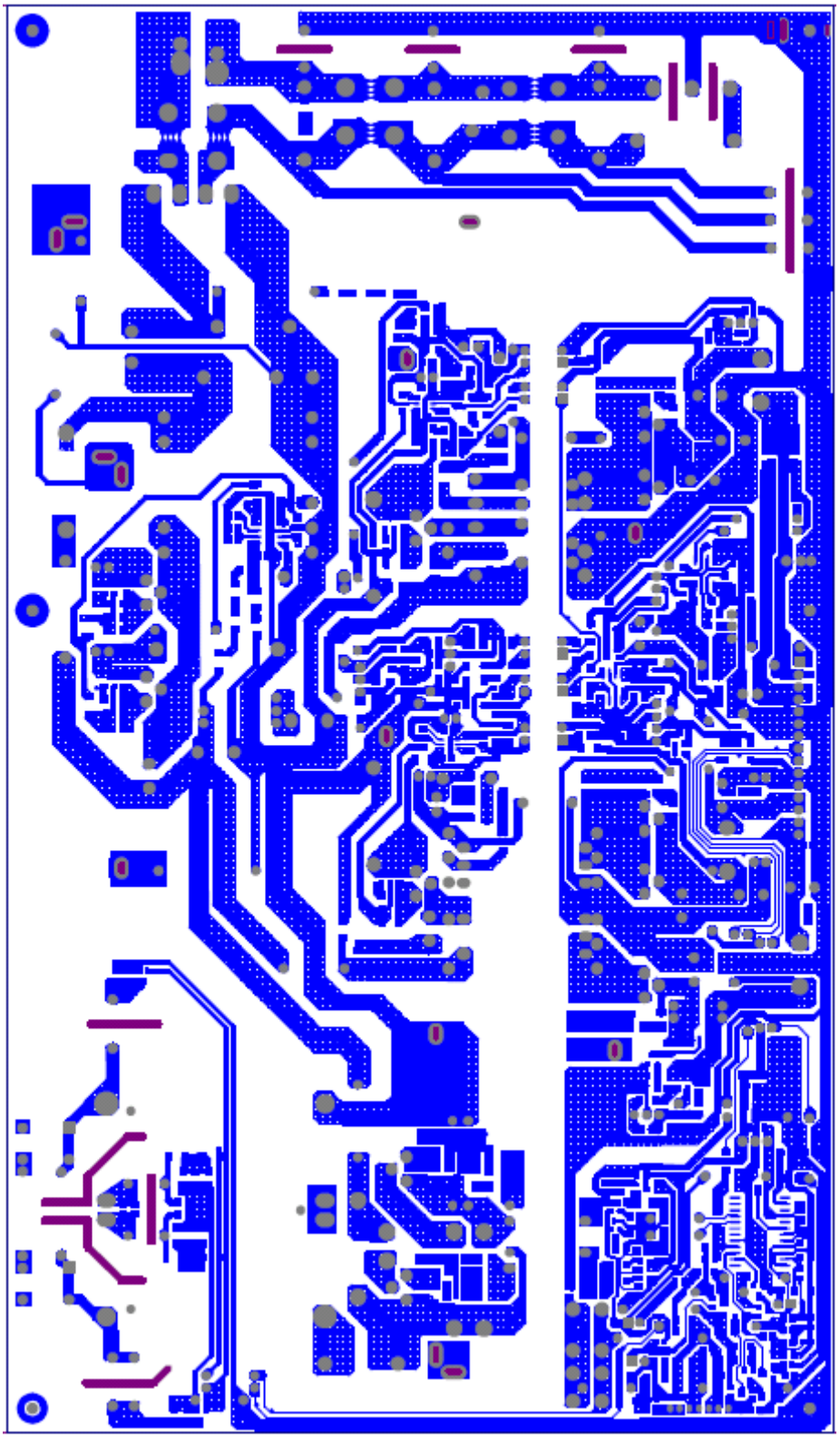

17. PCB OUTLINE DIMENSIONS :
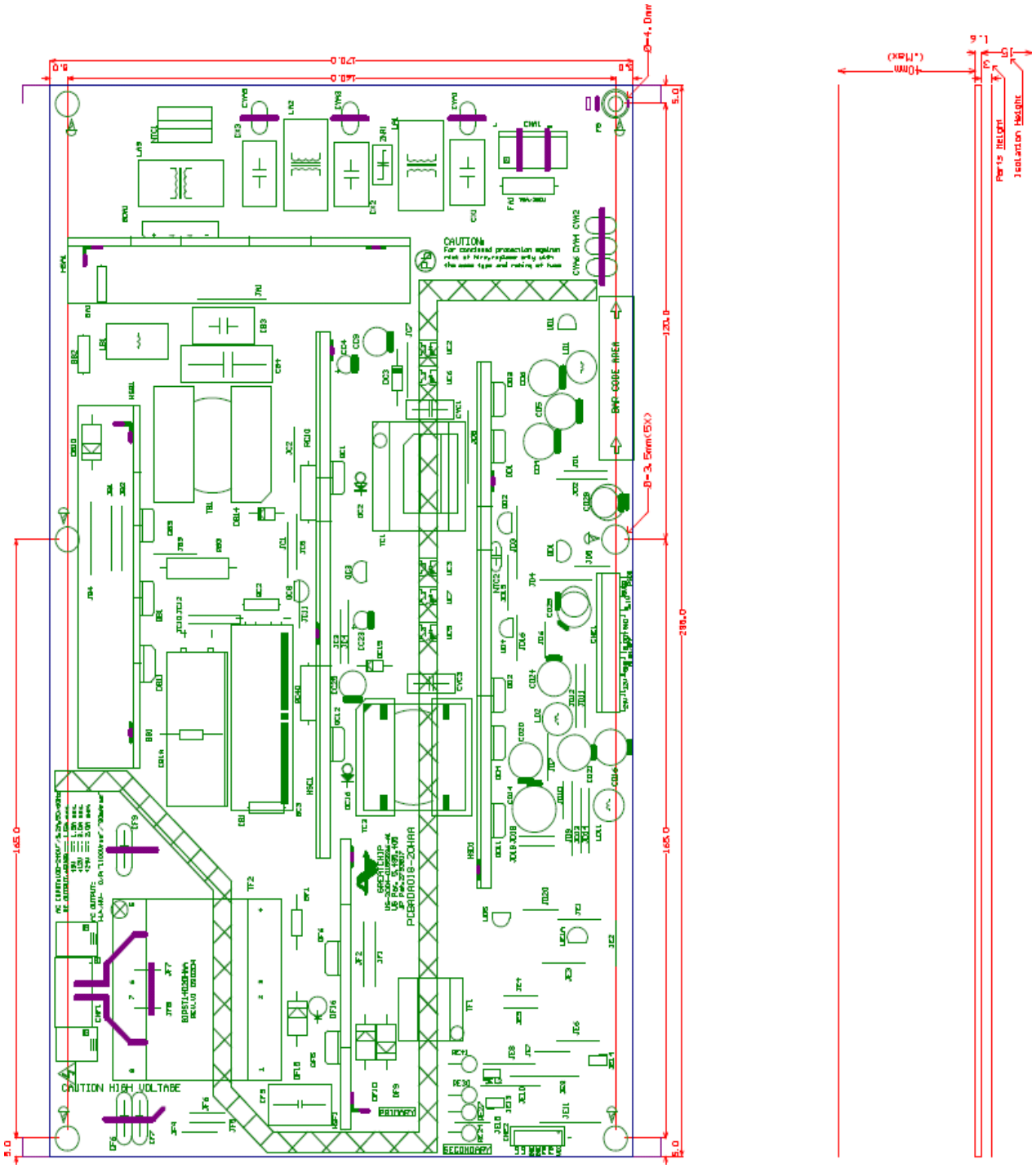
Outline : 295mm(L) * 170mm(W) *1.6mm(T) * 40mm(H)